5 Product specifications

5.1 Type R and RD

Type R with balls

Typ R with rollers

Type RD

With its type R, SCHNEEBERGER has developed the first standardised cross roller guide, which has defined the global industry standard.

The RD double V-shaped guide supplements the R linear guideway and supports space-saving and cost-effective solutions.

Type R benchmark data

Track and surface quality
- Finely ground supporting and/or locating surfaces and tracks (90° V-profile)

Materials (standard)
- Rails from through hardened tool steel 1.2842, hardness 58 - 62 HRC.
  The sizes R/RD 1 and 2 are made out of tool steel 1.3505.
- For non-corrosive guideways tool steel 1.4034 is used.
- Rolling element made of through hardened roller bearing steel, hardness 58 - 64 HRC.

Rolling element
- Ball or roller

Speed
- 1 m/s

Acceleration
- 50 m/s^2

Accuracy
- R and RD linear guideways are available in three quality classes (see chapter 9)

Operating temperatures
- -40° C to +80° C

The R and RD design can be combined with the following products:
- recirculating unit type SK, SKC and SR

Dimensions and load capacities type R

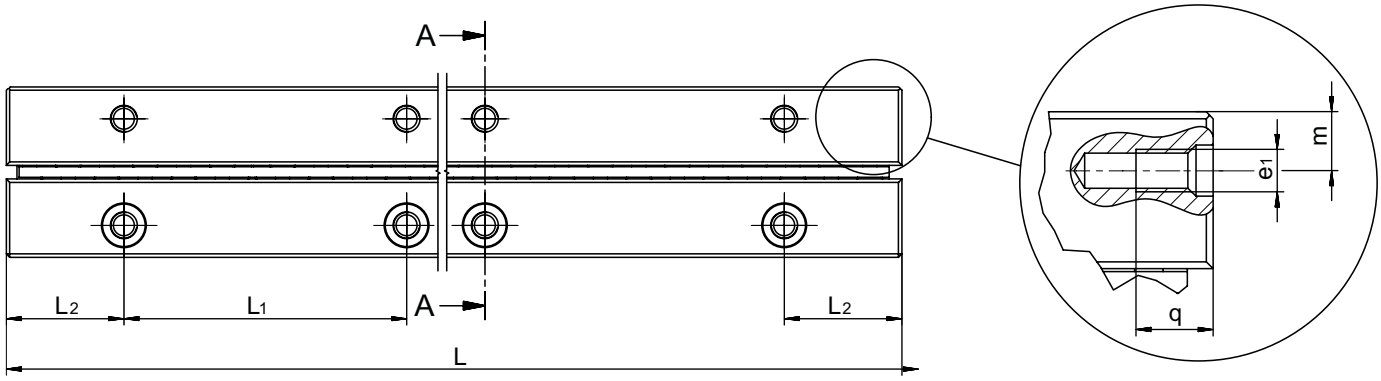

Type	Size	L in mm	Weight in g	A	B	Dw	J	L_1	L_2	N	d	e	e_1	f	g	m	q	Options (see chapter 7)	Accessories
				mm															
R	1	20	3	8.5	4	1.5	3.9	10	5	1.8	3	M2	M1.7	1.65	2.6	1.9	2.5	SQ SSQ RF EG ZG HA DU	Cage: - AA-RF 1 - AC 1 - AK 1 End piece: - GB 1
		30	4																
		40	5																
		50	6																
		60	7																
		70	8																
		80	9																
		100	12																
		120	14																
R	2	30	8	12	6	2	5.5	15	7.5	2.5	4.4	M3	M2.5	2.55	4	2.7	3.5	SQ SSQ RF EG ZG HA DU	Cage: - AA-RF 2 - AC 2 - AK 2 End piece: - GB 2
		45	11																
		60	14																
		75	17																
		90	20																
		105	23																
		120	26																
		150	34																
		180	40																
R	3	50	23	18	8	3	8.3	25	12.5	3.5	6	M4	M3	3.3	4.8	4.1	7	SQ SSQ RF EG ZG HA DU	Cage: - AA-RF 3 - AC 3 - AK 3 End pieces: - GB 3 - GC 3 - GC-A 3 End screw: - GA 3 Fastening screw - GD 6
		75	34																
		100	45																
		125	56																
		150	67																
		175	78																
		200	89																
		225	100																
		250	111																
		275	122																
		300	133																
		350	156																
		400	178																
		500	222																
		600	267																

5 Linear guideways

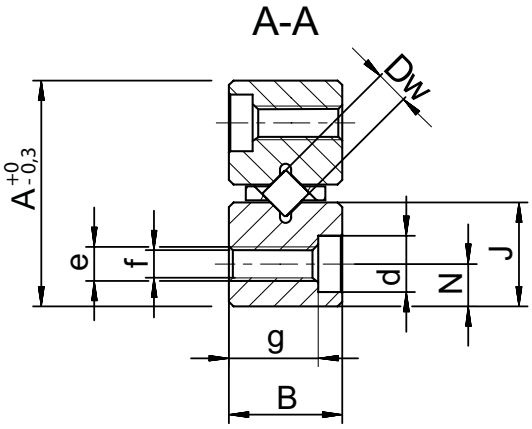

Type	Size	L in mm	Weight in g	A	B	Dw	J	L_1	L_2	N	d	e	e_1	f	g	m	q	Options (see chapter 7)	Accessories
				mm															
R	6	**100**	145	31	15	6	13.9	50	25	6	9.5	M6	M5	5.2	9.8	6.9	9	SQ SSQ RF EG EE ZG HA DU	Cage: - AA-RF 6 - AC 6 - AK 6 - EE 6 End pieces - GB 6 - GC 6 - GC-A 6 End screw: - GA 6 Fastening screw - GD 6
		150	220																
		200	295																
		250	370																
		300	445																
		350	520																
		400	595																
		450	670																
		500	745																
		600	895																
		700	1'045																
		800	1'195																
		1'000	1'500																
R	9	**200**	630	44	22	9	19.7	100	50	9	10.5	M8	M6	6.8	15.8	9.8	9	SQ SSQ RF EG EE ZG HA DU	Cage: - AC 9 - AK 9 - EE 9 End pieces - GB 9 - GC 9 - GC-A 9 End screw: - GA 9 Fastening screw - GD 9
		300	945																
		400	1'260																
		500	1'575																
		600	1'890																
		700	2'205																
		800	2'520																
		900	2'835																
		1'000	3'150																
		1'100	3'465																
		1'200	3'780																
		1'400	4'410																
R	12	**200**	1'040	58	28	12	25.9	100	50	12	13.5	M10	M8	8.5	19.8	12.9	12	SQ SSQ RF EG ZG HA DU	Cage: - AC 12 - AK 12 End pieces: - GB 12 - GC 12 - GC-A 12 End screw: - GA 12 Fastening screw: - GD 12
		300	1'560																
		400	2'090																
		500	2'615																
		600	3'140																
		700	3'665																
		800	4'190																
		900	4'715																
		1'000	5'240																
		1'100	5'765																
		1'200	6'290																

The types in bold are standard. Other lengths and types R 15, R 18 and R 24 are available on request

Dimensions and load capacities of type RD

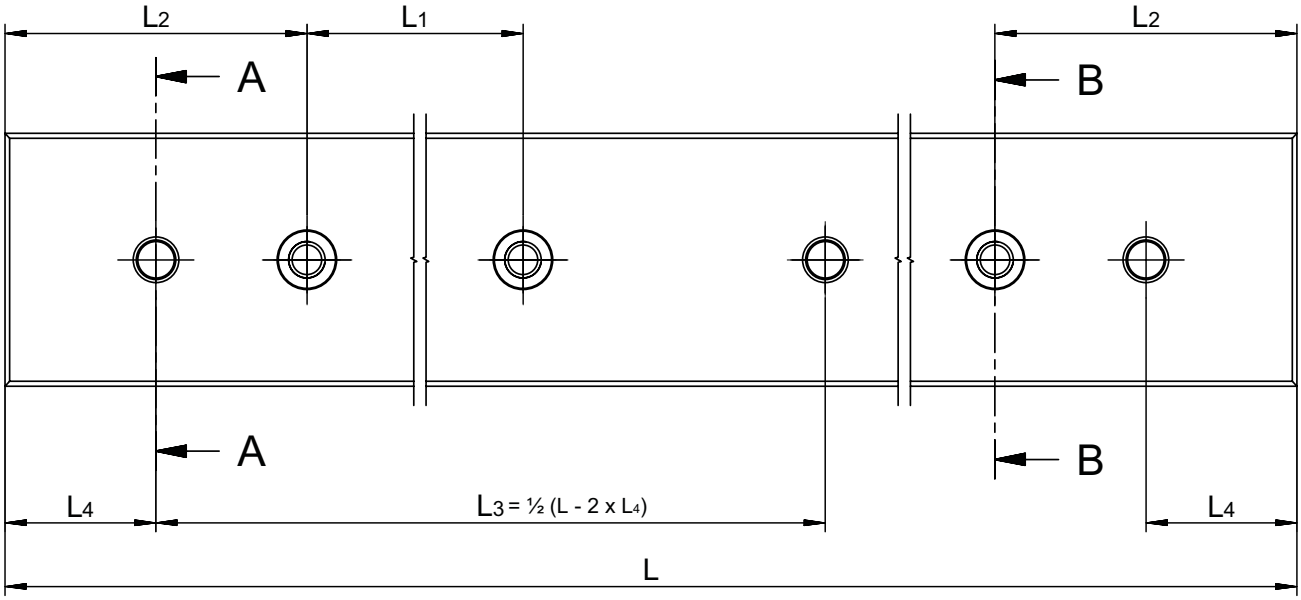

Type	Size	L in mm	Weight in g	A	B	B_1	B_2	Dw	J	L_1	L_2	L_4	Q	d	d_1	e	f	f_1	g	g_1	k	Options (see chapter 7)	Accessories
				mm																			
RD	1	100	50	22	4	5.5	6	1.5	12.8	25	12.5	5	13.5	4.4	-	M3	2.55	3 H7	3.5	-	2	SQ SSQ RF EG ZG DU	Cage: - AA-RF 1 - AC 1 - AK 1
		150	70																				
		200	100																				
RD	2	200	220	30	6	8.5	9	2	17	50	25	12.5	18	6	-	M4	3.35	3 H7	5.4	-	3	SQ SSQ RF EG ZG DU	Cage: - AA-RF 2 - AC 2 - AK 2
		300	320																				
		400	430																				
RD	3	300	690	46	8	11.5	12	3	26.6	50	25	12.5	28	7.5	3.5	M5	4.2	3 H7	7.3	6.5	4	SQ SSQ RF EG ZG DU	Cage: - AA-RF 3 - AC 3 - AK 3
		400	920																				
		500	1'150																				
		600	1'380																				
		800	1'840																				

5 Linear guideways

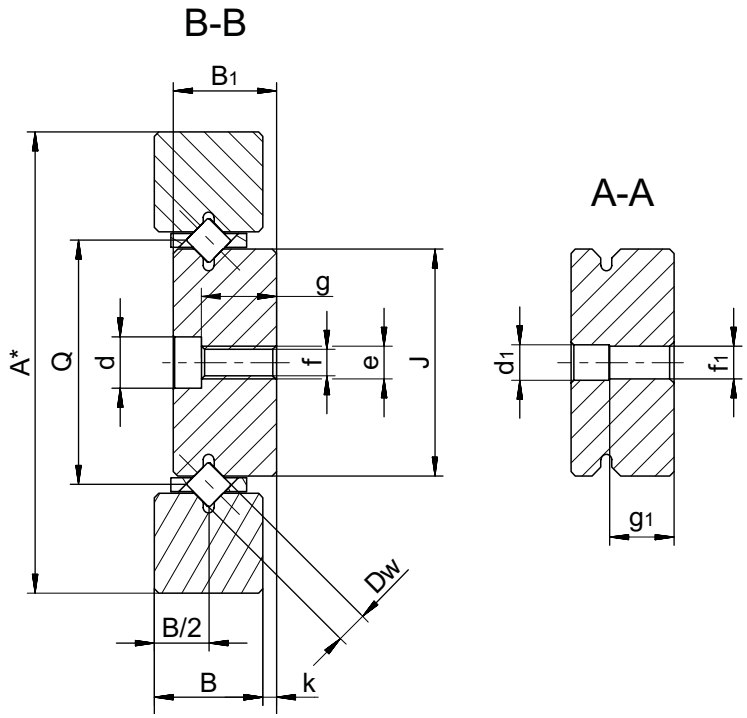

* with linear guideways type R

Type	Size	L in mm	Weight in g	A	B	B_1	B_2	Dw	J	L_1	L_2	L_4	Q	d	d_1	e	f	f_1	g	g_1	k	Options (see chapter 7)	Accessories
				mm																			
RD	6	Max. 2000	On request	76	15	19	20	6	41.8	100	50	25	45	9.5	6.5	M6	5.2	6 H7	13.8	12	5	SQ SSQ RF EG EE ZG DU	Cage: - AA-RF 6 - AC 6 - AK 6 - EE 6
RD	9	Max. 2000	On request	116	22	27	28	9	67.4	100	50	25	72	10.5	8.5	M8	6.8	8 H7	20.8	16	6	SQ SSQ RF EG EE ZG DU	Cage: - AC 9 - AK 9 - EE 9
RD	12	Max. 2000	On request	135	28	34	35	12	70.8	100	50	25	77	13.5	10.5	M10	8.5	10 H7	25.8	20	7	SQ SSQ RF EG ZG DU	Cage: - AC 12 - AK 12

The types in bold are standard. Other lengths and types RD 6, RD 9 and RD 12 are available on request

Maximum lengths for type R

Type / Size	Quality class	Max. lengths in standard material (in mm)	Max lengths in non-corrosive material (in mm)
R 1	NQ	180	150
	SQ		
	SSQ	120	120
R 2	NQ	300	300
	SQ	300	300
	SSQ	180	180
R 3	NQ	700	600
	SQ		
	SSQ	600	
R 6	NQ	1500	1400
	SQ		1200
	SSQ	1200	900
R 9	NQ	1500	1400
	SQ		1200
	SSQ	1200	900
R 12	NQ	1500	1400
	SQ		1200
	SSQ	1200	900

Maximum lengths for type RD

Type / Size	Quality class	Max. lengths in standard material (in mm)	Max lengths in non-corrosive material (in mm)
RD 1	NQ	300	300
	SQ		
	SSQ		
RD 2	NQ	500	500
	SQ		
	SSQ		
RD 3	NQ	1200	600
	SQ		
	SSQ		
RD 6	NQ	1500	900
	SQ		
	SSQ	1200	
RD 9	NQ	1500	900
	SQ		
	SSQ	1200	
RD 12	NQ	1500	900
	SQ		
	SSQ	1200	

Rail chamfer

The detail of the rail chamfer is shown in the chart below. Please note that the part number and company logo are marked opposite to the datum and supporting surfaces.

Type / Size	Rail chamfer of reference edges in mm
R 1	0.3 x 45°
R 2	0.3 x 45°
R 3	0.6 x 45°
R 6	0.8 x 45°
R 9	0.8 x 45°
R 12	1.0 x 45º

Accessories for type R and RD

Roller cage type AC

Compatible with:
Linear guideway type R and RD,
Sizes 1 to 12

Design:
Rollers fixed in place

Installation method:
For normal application and certain overrunning cage applications

Material:
Sizes 1, 2 and 3 POM
As from size 65 PA GF 30%, plastic/ steel wire composite construction. The wire is made out of stainless steel.

Option:
Corrosion-resistant rollers

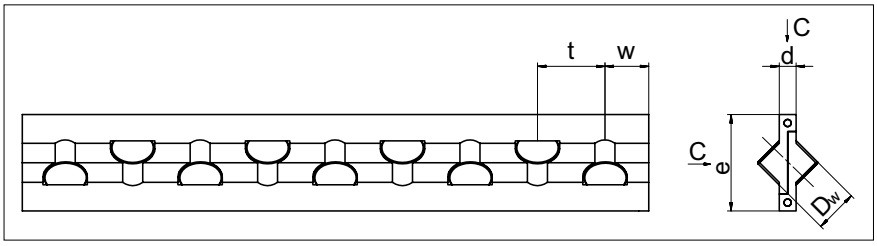

Type	Size	Dw	d	e	t	w	C per roller in N	max. length in mm
AC	1	1.5	0.45	3.5	3	approx. 1.5	50	80
	2	2	0.75	5	4	approx. 2	85	170
	3	3	1	7	5	approx. 2.5	130	1'200
	6	6	2.5	14	9	approx. 6	530	1'500
	9	9	3.5	20	14	approx. 9	1'300	1'500
	12	12	4.5	25	18	approx. 11	2'500	1'500

Roller cage type AA-RF

Compatible with:
Linear guideway type R and RD,
Sizes 1, 2, 3 and 6

Design:
Rollers fixed in place

Installation method:
Not suitable as an overrunning cage

Material:
Cage and rollers made of corrosion-resistant steel and thus also suitable for use in vacuum

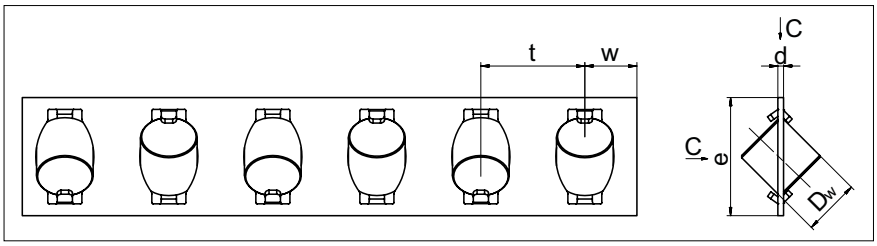

Type	Size	Dw	d	e	t	w	C* per roller in N	max. length in mm
AA-RF	1	1.5	0.2	3.8	3	approx. 1.5	44	90
	2	2	0.25	5.9	4	approx. 2	75	150
	3	3	0.3	7.5	5	approx. 2.5	115	350
	6	6	0.8	14	12	approx. 6	465	1'200

*The loading capacity C already includes the hardness factor f_H as set out in chapter 12.3

Accessories for type R and RD

Ball cage type AK

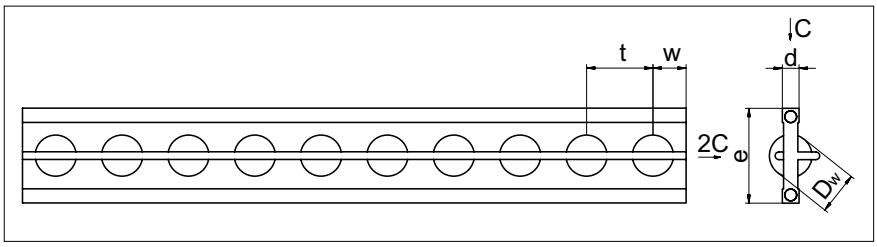

Compatible with:
Linear guideway type R and RD,
Sizes 1 to 12

Design:
Balls retained

Installation method:
For normal application and certain overrunning cage applications

Material:
Sizes 1, 2 and 3 POM
As from size 65 PA GF 30%, plastic/ steel wire composite construction. The wire is made out of stainless steel.

Type	Size	Dw	d	e	t	w	C per roller in N	max. length in mm
AK	1	1.5	0.45	3.5	2.2	approx. 1.5	9	80
	2	2	0.75	5	4	approx. 2	15	100
	3	3	1	7	4.2	approx. 2.5	25	180
	6	6	2.5	14	9	approx. 6	65	1'500
	9	9	3.5	20	14	approx. 9	150	1'500
	12	12	4.5	25	18	approx. 11	260	1'500

Roller cage type EE

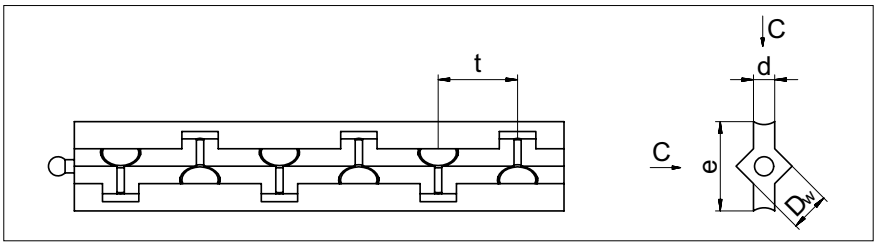

Compatible with:
Linear guideway type R and RD,
Sizes 6 and 9

Design:
- The clearances of the guide rails are matched with the EE roller cage, which consequently works as a dirt wiper. Displacement resistance is increased by the wiper function.
- Rollers fixed in place
- Only used with linear guideways with add-on designation EE
- Select end pieces of type GB or GC

Installation method:
Not suitable as an overrunning cage and for freely surface-mounted guideways

Material:
PE

Type	Size	Dw	d	e	t	C per roller in N	max. length in mm
EE	6	6	3.2	13.5	12	530	1'500
	9	9	4.6	19	18	1'300	1'500

Accessories for type R and RD

End screws type GA

Compatible with:
Linear guideway R 3 to R 12

Installation method:
For horizontal installation

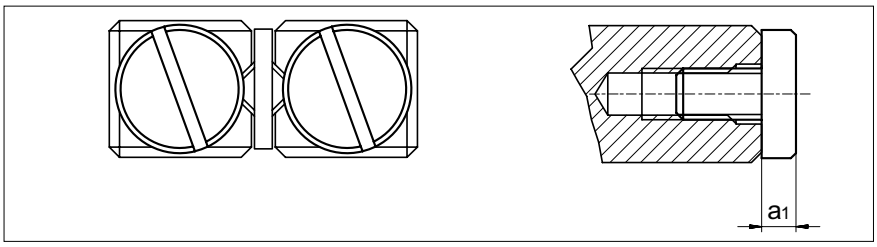

Size	GA 1	GA 2	GA 3	GA 6	GA 9	GA 12
a_1	1.2	1.6	2	3	3	3

End piece type GB 1

Compatible with:
Linear guideway R 1

Installation method:
No restrictions

Scope of supply:
Including fastening screws

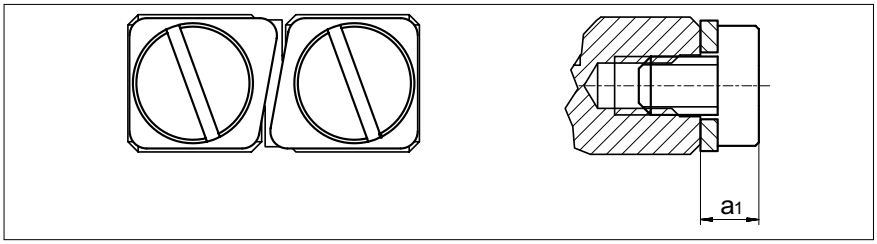

Size	GB 1
a_1	1.7

End piece type GB 2

Compatible with:
Linear guideway R 2

Installation method:
No restrictions

Scope of supply:
Including fastening screws

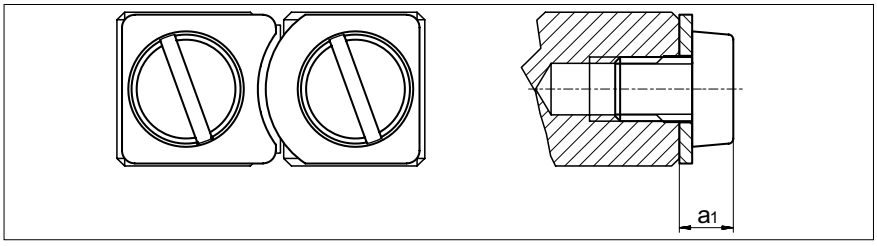

Size	GB 2
a_1	2

End piece type GB 3 to 12

Compatible with:
Linear guideway R 3 to R 12

Installation method:
No restrictions

Scope of supply:
Including fastening screws

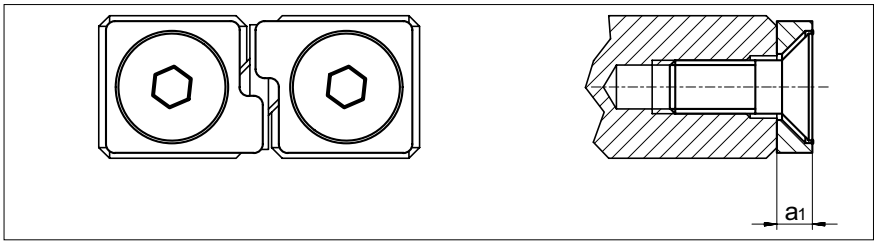

Size	GB 3	GB 6	GB 9	GB 12
a_1	2	3	4	5

Accessories for type R and RD

End piece type GC

Compatible with:
Linear guideway R 3 to R 12

Installation method:
For overrunning cages

Scope of supply:
Including fastening screws

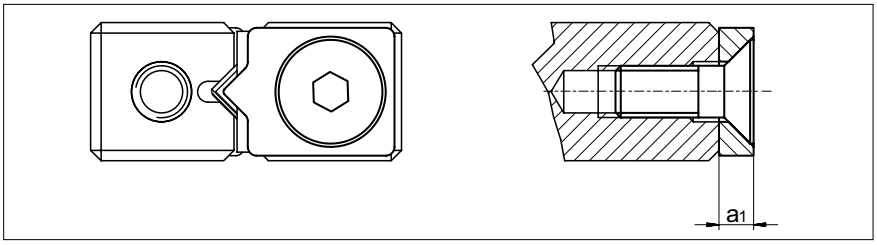

Size	GC 3	GC 6	GC 9	GC 12
a_1	2	3	4	5

End piece type GC-A (with wipers)

Compatible with:
Linear guideway R 3 to R 12

Design:
with felt wiper

Installation method:
No restrictions

Scope of supply:
Including fastening screws

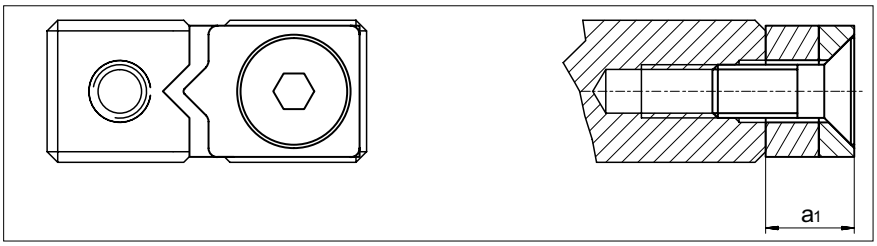

Size	GC-A 3	GC-A 6	GC-A 9	GC-A 12
a_1	5	6	7	8

Fastening screws with thin shaft type GD 3 to GD 12

Special feature:
To even out differences in the hold spacings

Compatible with:
Linear guideway type R 3 to R 12

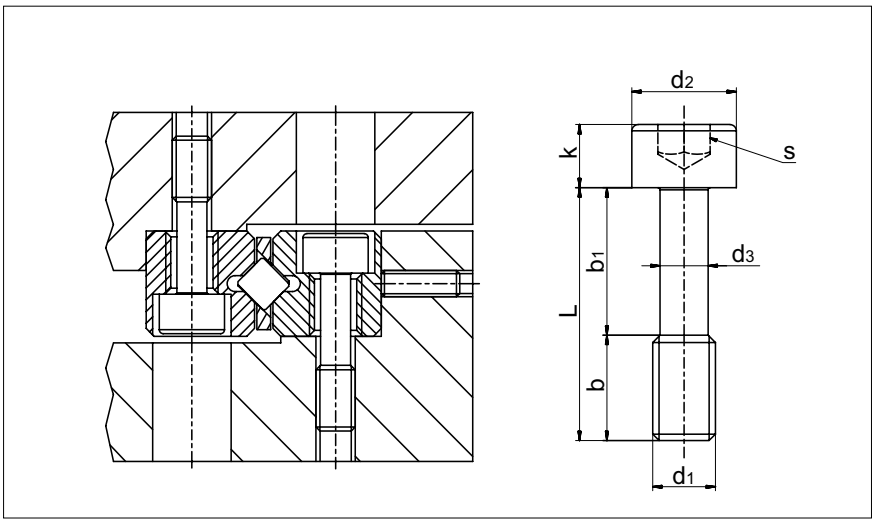

Type	Size	L	b	b_1	d_1	d_2	d_3	k	s	Tightening torque in Ncm
GD	3	12	5	7	M3	5	2.3	3	2.5	102
	6	20	8	12	M5	8	3.9	5	4	460
	9	30	12	18	M6	8.5	4.6	6	5	792
	12	40	17	23	M8	11.3	6.25	8	6	1'920